M

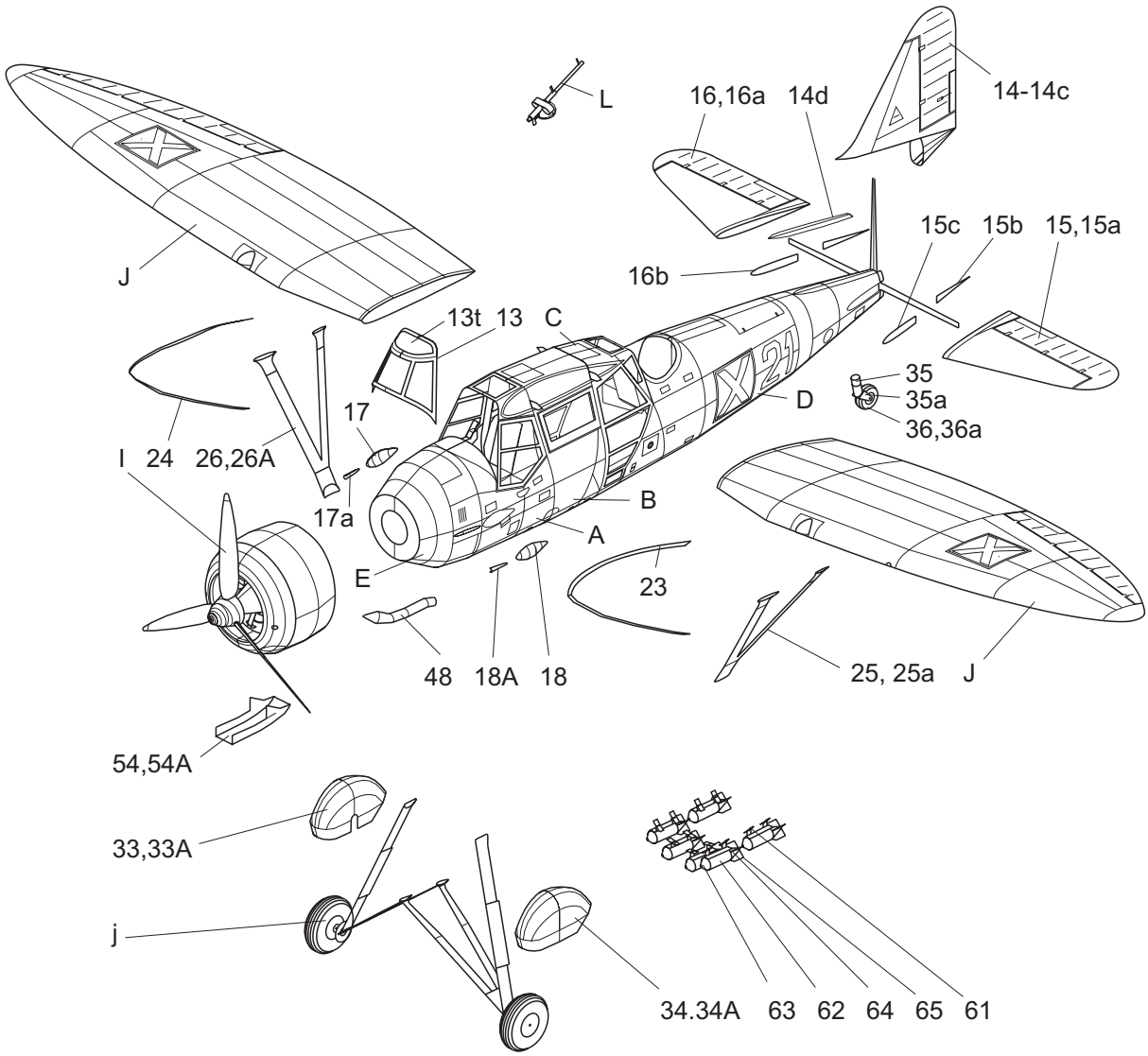



©2004 E. ZARKOV